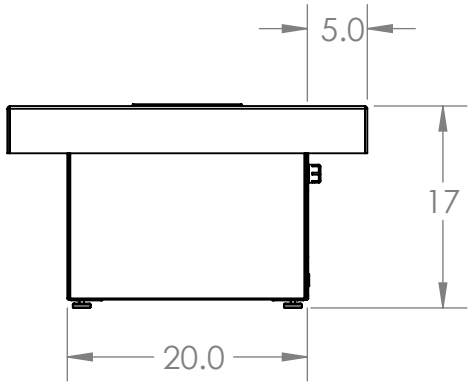

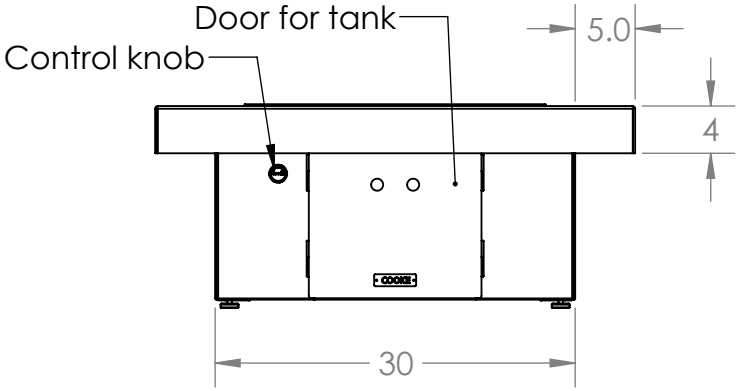

The Santa Barbara fire pit table has a bold style but is only 17 inches high this low table top is pleasing to the eye and ideal for putting your feet up while watching the sun set.

- Top Material
3/16 Aluminum plate or Granite Tier 1,2,3 or personal slab selection

- Base
14 GA Alumnum
Powder coating in several standard colors or custom colors are available.

- Fire pit
304 SS pan, lid and burner
Optional glass wind screen
Media: Broken Glass, Lava rock
Custom options include Ceramic stones, logs , etc.

- Fuel
Propane or Natural gas
LP includes 1 special low profile tank

- Optional Full Electronic Ignition available requires 120v switched power

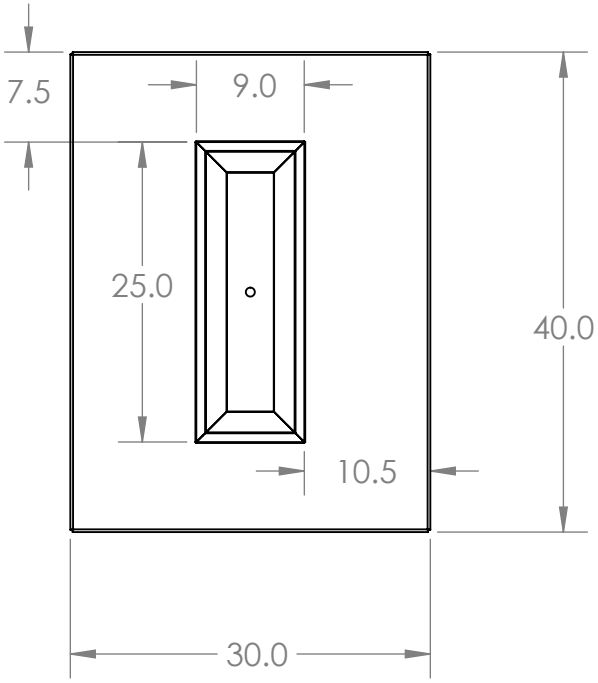

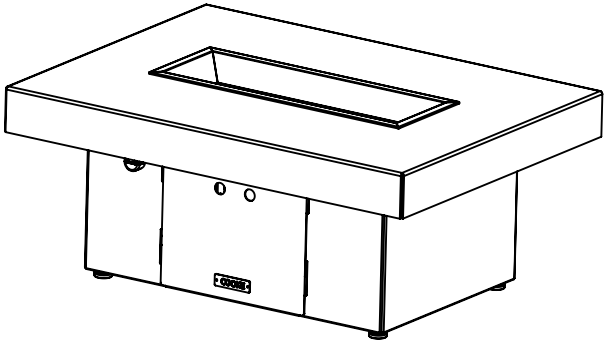

UNLESS OTHERWISE SPECIFIED: DIMENSIONS ARE IN INCHES TOLERANCES: FRACTIONAL ± 1/32 ANGULAR: MACH ± .5° BEND ±1° TWO PLACE DECIMAL ± .05 THREE PLACE DECIMAL ±.010	**PROPRIETARY AND CONFIDENTIAL** THE INFORMATION CONTAINED IN THIS DRAWING IS THE SOLE PROPERTY OF **DCI LLC**. ANY REPRODUCTION IN PART OR AS A WHOLEWITHOUT THE WRITTEN PERMISSION OF **DCI LLC** ISPROHIBITED.	COOKE CONTEMPORARY FURNITURE info@cookefurniture.com 888-303-2453
INTERPRET GEOMETRIC TOLERANCING PER: ANSI	COMMENTS:	TITLE: Santa Barbara fire pit table 30x40x17
MATERIAL Aluminum		SIZE A · DWG. NO. MT-SOCAL-30x40x17 · REV
FINISH		
DO NOT SCALE DRAWING		SCALE: 1:16 · WEIGHT: · SHEET 1 OF 1

5 4 3 2 1