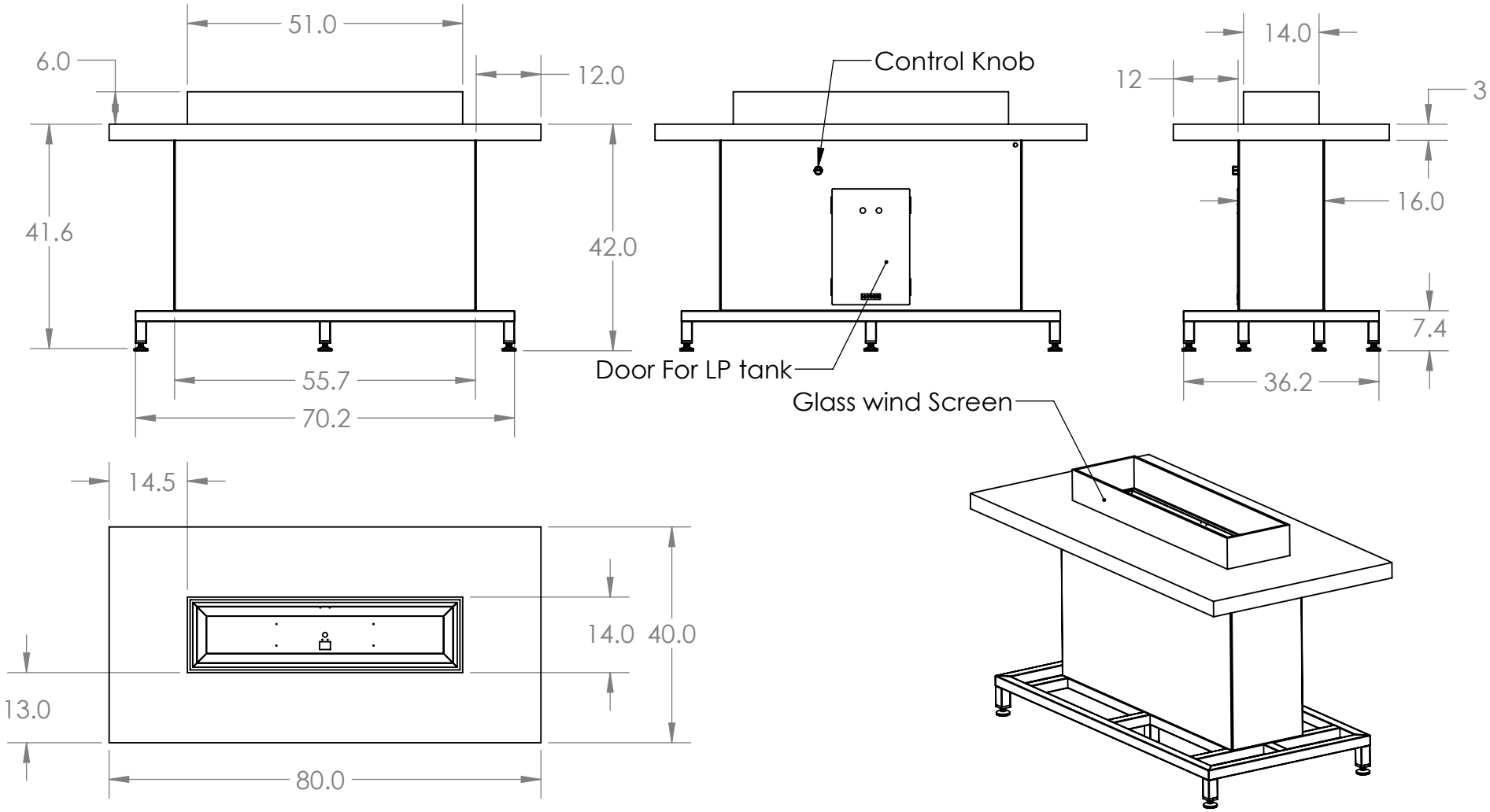

UNLESS OTHERWISE SPECIFIED: DIMENSIONS ARE IN INCHES TOLERANCES: FRACTIONAL ± 1/32 ANGULAR: MACH ± .5° BEND ±1° TWO PLACE DECIMAL ± .05 THREE PLACE DECIMAL ±.010	**PROPRIETARY AND CONFIDENTIAL** THE INFORMATION CONTAINED IN THIS DRAWING IS THE SOLE PROPERTY OF **DCI LLC**. ANY REPRODUCTION IN PART OR AS A WHOLEWITHOUT THE WRITTEN PERMISSION OF **DCI LLC** ISPROHIBITED.	COOKE CONTEMPORARY FURNITURE info@cookefurniture.com 888-303-2453
INTERPRET GEOMETRIC TOLERANCING PER: ANSI	COMMENTS:	TITLE: LONG BEACH COMMUNITY TABLE 40x80x42
MATERIAL 304		SIZE A / DWG. NO. LBC-ASM-40x80x42 / REV B
FINISH TBD		
DO NOT SCALE DRAWING		SCALE: 1:48 / WEIGHT: / SHEET 1 OF 2

5 4 3 2 1