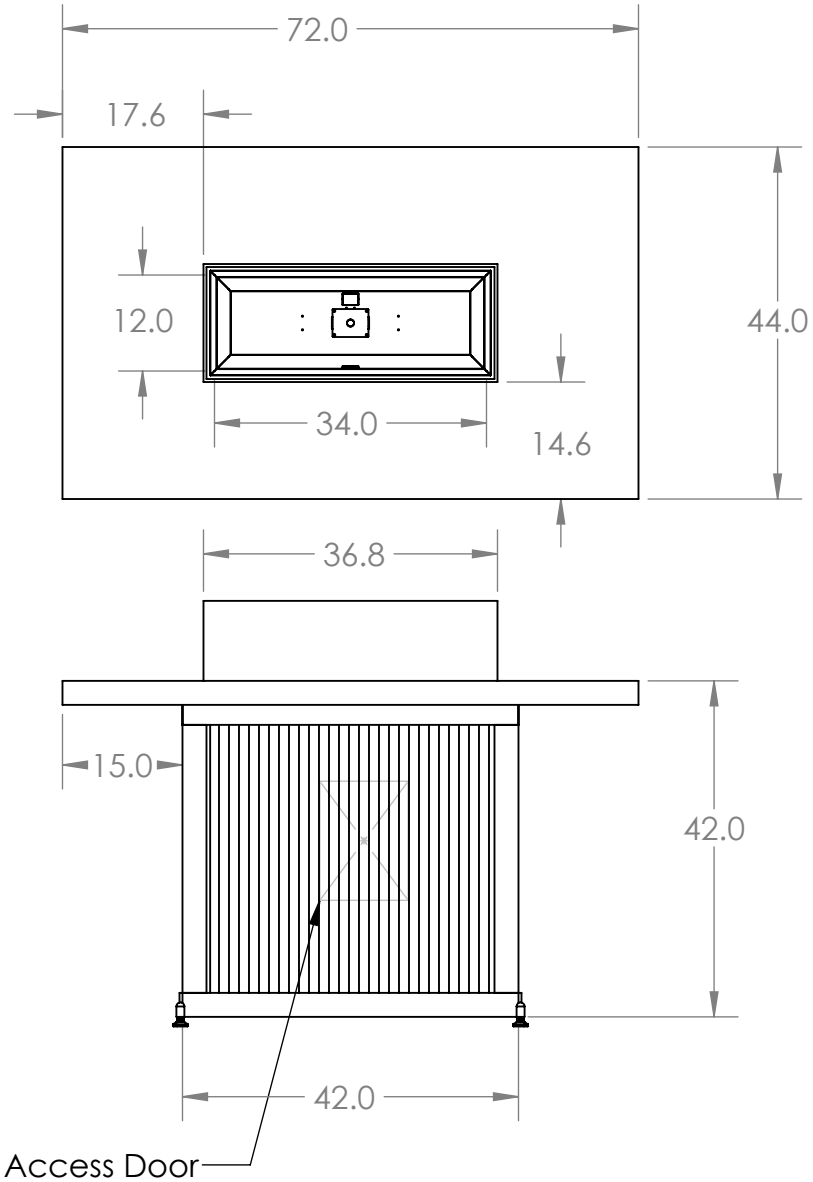

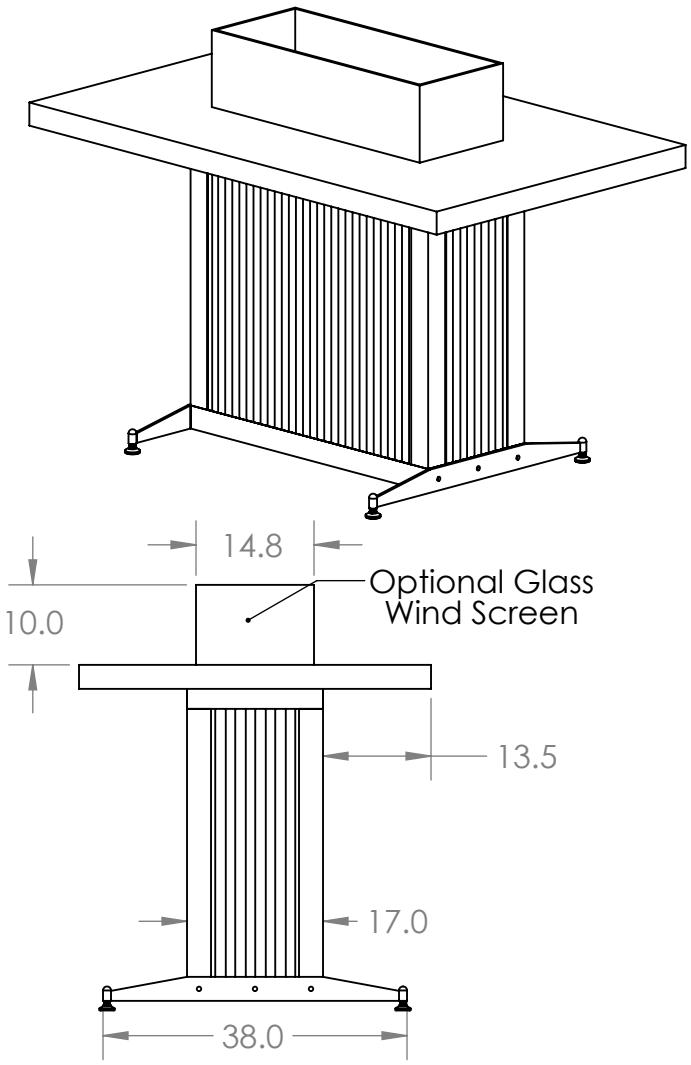

The Santa Monica fire pit table has a cool industrial vibe and is perfect for a commercial bar top dinning table.

- Top Material
Granite Tier 1,2,3, Stainless steel or Custom selection

- Steel Base Frame Options
Powder coating in several standard colors or custom colors are available, Hot Dip Galvanized

- Steel Side Panel Options
Bonderized corrugated steel, flat steel, Raw or Powder coated, Cor Ten steel or Galvanized

- Fire pit media
Broken Glass, Lava rock
Custom options include
Ceramic stones, logs , etc.

- Fuel 60, 000 BTU
Propane or Natural gas

- Optional forced air heat requires a 120 v 15 amp switched power

- Optional electronic Ignition requires 120v switched power

- Optional LED Lighting requires 120v switched power or Battery pack

UNLESS OTHERWISE SPECIFIED: DIMENSIONS ARE IN INCHES TOLERANCES: FRACTIONAL ± 1/32 ANGULAR: MACH ± .5° BEND ±1° TWO PLACE DECIMAL ± .05 THREE PLACE DECIMAL ±.010	**PROPRIETARY AND CONFIDENTIAL** THE INFORMATION CONTAINED IN THIS DRAWING IS THE SOLE PROPERTY OF **DCI LLC**. ANY REPRODUCTION IN PART OR AS A WHOLEWITHOUT THE WRITTEN PERMISSION OF **DCI LLC** ISPROHIBITED.	COOKE CONTEMPORARY FURNITURE info@cookefurniture.com 888-303-2453
INTERPRET GEOMETRIC TOLERANCING PER: ANSI	COMMENTS:	TITLE: Santa Monica Fire Pit Table 44x72x42
MATERIAL Steel		SIZE A / DWG. NO. SNTM-ASM-44x72x42 / REV A
FINISH TBD		
DO NOT SCALE DRAWING		SCALE: 1:24 / WEIGHT: / SHEET 1 OF 2

5 4 3 2 1